Siphon for basin 1 1/4" - Brushed Durabrass (23kt Gold)

IMO

10 060 780

- rosette 78 x 78 mm

Fits: IMO, MEM, CL.1, CYO

Brushed Durabrass (23kt Gold)	10 060 780-28
Chrome	10 060 780-00
Brushed Platinum	10 060 780-06
Platinum	10 060 780-08
Dark Chrome	10 060 780-19
Matte Black	10 060 780-33
Brushed Champagne (22kt Gold)	10 060 780-46
Champagne (22kt Gold)	10 060 780-47
Brushed Chrome	10 060 780-93
Brushed Dark Platinum	10 060 780-99

We reserve the right to change designs, product range and technical specifications without prior notice.
More information can be found at: www.dornbracht.com +49 (0) 2371 8899 900 mail@dornbracht.com

Siphon for basin 1 1/4" - Brushed Durabrass (23kt Gold)

IMO

10 060 780

mm [inches]

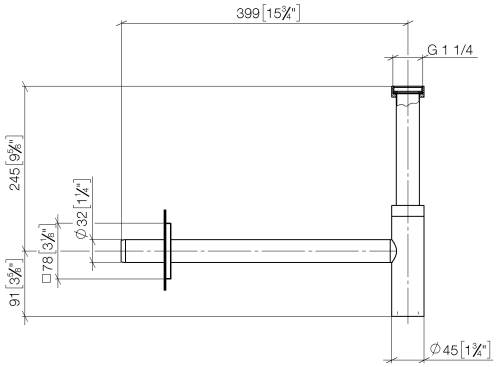

Siphon for basin 1 1/4" - Brushed Durabrass (23kt Gold)

IMO

10 060 780

Parts for other finishes can be found here: Chrome

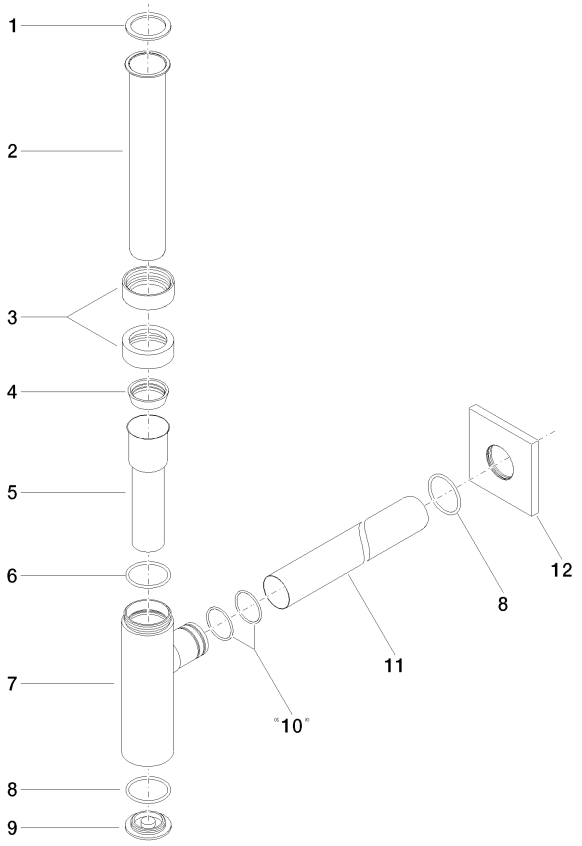

Spare parts list

No.	Item Number	Name	Quantity used	Delivery time
1	09 14 20 060 90	seal	1	2
2	09 28 23 007-28	pipe	1	20
3	09 23 30 022-28	nut	2	20
4	09 14 03 015 90	seal	1	2
5	09 28 23 019-28	pipe	1	-
	Spare part can no longer be ordered, please order the replacement item			
6	09 14 10 149 90	seal	1	2
7	04 11 01 045 00-28	casing	1	20
8	09 14 10 148 90	seal	2	2
9	09 21 02 004-28	lid	1	20
10	09 14 10 112 90	seal	2	2
11	09 28 23 018-28	pipe	1	20
12	09 27 78 021-28	rosette	1	20

We reserve the right to change designs, product range and technical specifications without prior notice.
More information can be found at: www.dornbracht.com +49 (0) 2371 8899 900 mail@dornbracht.com